PARTS LIST			
ITEM	QTY	PART NUMBER	DESCRIPTION
1	1	9530-0600-1	P/C BLACK ZINC DIECAST LOCK BODY ASSEMBLY
2	1	9530-0600-2	M/STEEL LOCK CLAMP - Z/C PASSIVATE
3	1	9530-0600-3	M/STEEL CLAMP SCREW - Z/C PASSIVATE
4	1	9530-0600-4	BLACK RUBBER LOCK GASKET
5	1	9530-0600-5	ZINC LOCK STRIKER - NATURAL
6	1	9530-0600-6	S/STEEL M6 x 25mm BOLT - NATURAL
7	1	9530-0600-7	S/STEEL M6 HEX NUT - NATURAL

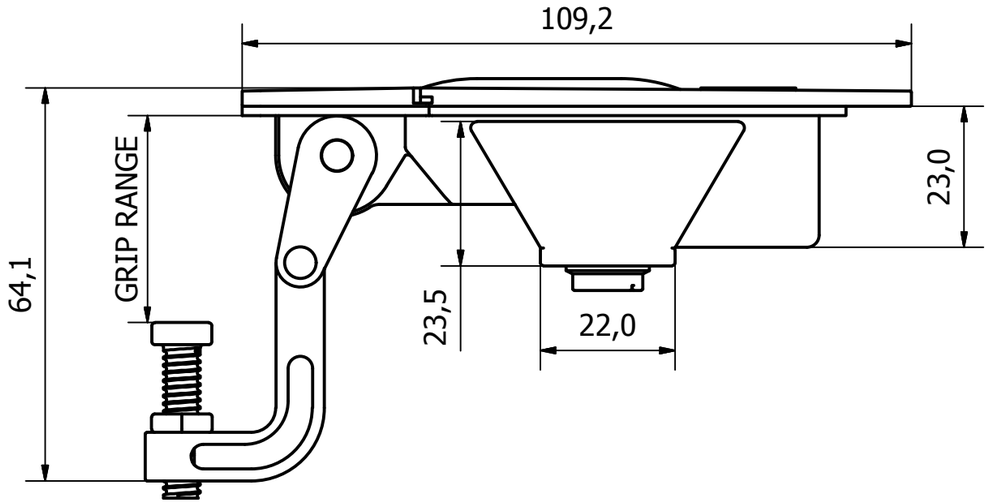

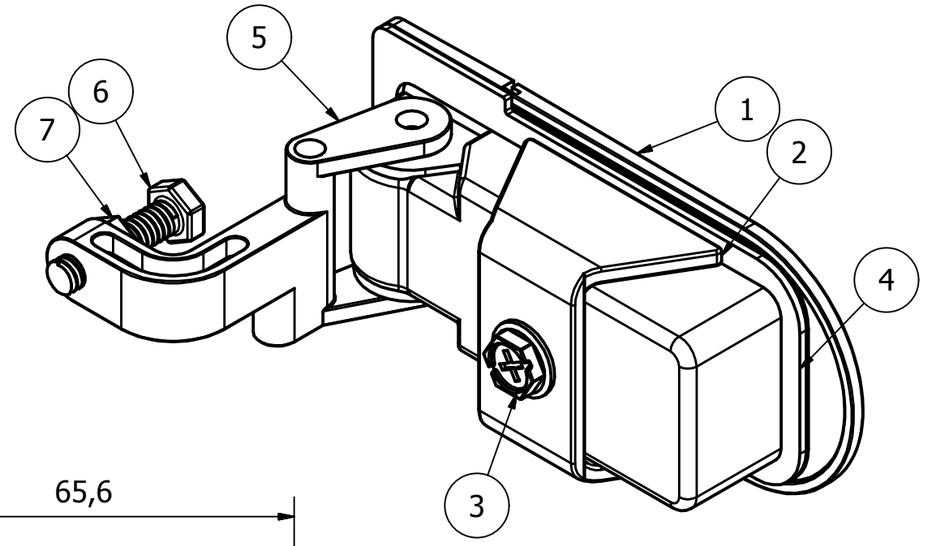

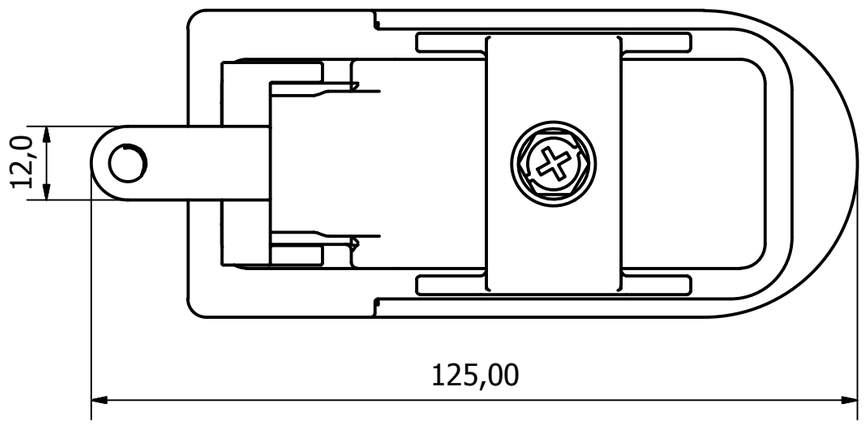

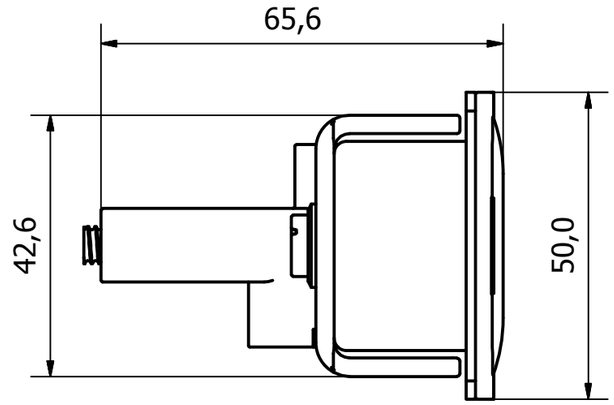

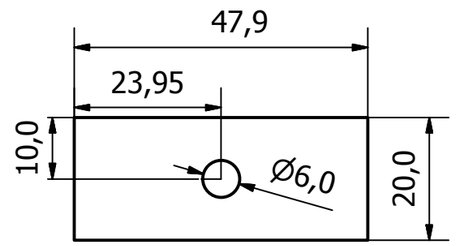

ADDITIONAL CLAMPING PLATE

NOTE:

LOCKABLE - SUPPLIED WITH TWO KEYS AND ADDITIONAL CLAMPING PLATE. UTILISES A PUSH BUTTON RELEASE

GRIP RANGE - 29-45mm

REV	DESCRIPTION	DATE	APPROVED
1	VALIDATION COMPLETE	17/07/17	A.P

GENERAL TOLERANCES ON LENGTHS
0.5 - 6 ± 0.1mm
6 - 30 ± 0.2mm
30 - 120 ± 0.3mm
120 - 400 ± 0.5mm
400 - 1000 ± 0.8mm
1000 - 2000 ± 1.2mm
2000 - 4000 ± 2.0mm

ALBERT JAGGER LTD
GREEN LANE
WALSALL
WEST MIDLANDS
WS2 8HG
PHONE: 01922 471000
FAX: 01922 648021

THIS DRAWING & THE DESIGN SHOWN ARE THE PROPERTY OF ALBERT JAGGER LTD AND MUST NOT BE USED OR COPIED BY A THIRD PARTY WITHOUT PERMISSION

DRAWN BY	CHECKED BY	THIRD ANGLE PROJECTION	SCALE	MATERIAL	MASS	FINISH	Date	ALL DIMS IN MM UNLESS STATED DO NOT SCALE	A3
U.F	A.P		1 : 1	-	0.604 kg	SEE TABLE	05/06/2017		

albert Jagger

LOCKABLE TRIGGER LATCH C/W GASKET AND TWO KEYS

9530-0600	Edition 1	Sheet 1 / 1